Triangular · P3D SERIES Infrared 850 nm

lumher

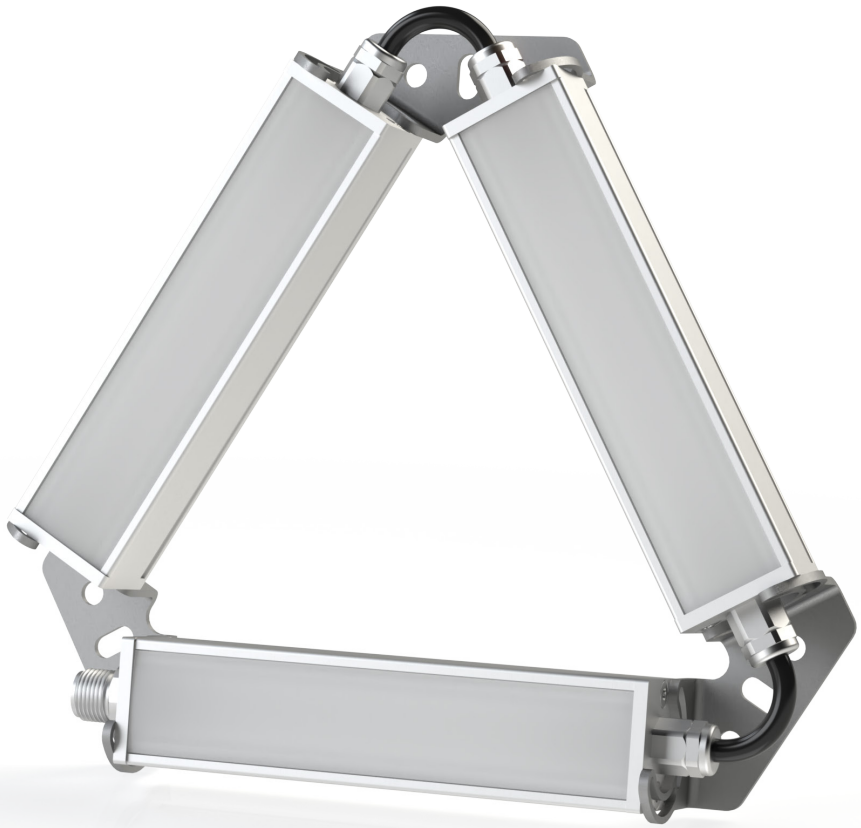

24 V
DC

NOT
CASCADABLE

90 mm
INCREMENTAL

CABLE
M12A

MACHINE VISION

CONTINUOUS 1x
STROBE 4x

INTEGRATED
CONTROLLER

IP40
IP65

36
MONTHS

EU
MADE IN SPAIN

Technical specifications

Power supply voltage	24 Vdc ±5%	
Trigger input	24 Vdc PNP / NPN	
Max. on time	Continuous = unlimited	Strobe = 10 ms
Max. working cycle	Continuous = 1	Strobe = 1/6
Max. consumption Trigger input	1,5 mA	
Max. number of cascadable modules	This luminaire is not cascadable	
Wavelength	Infrared	850 nm
Beam angle	Semidiffuse Ultradiffuse	60° 110°
Electrical protections	Transient overvoltages Polarity reversal Current sabilizer	YES YES YES
IP Rating	IP40 o IP65	
Protection type	Class III	
Operating temperature	-10 °C to +40 °C	
Storage temperature	0°C to +60 °C	
Max. relative humidity	80% (without condensation)	
Body material	Anodized aluminum	
Side cover material	Anodized aluminum	
Diffuser material	Polycarbonate	
Connection types	M12A, 2m cable, M12A connector with cable	
Standards	RoHs, CE	

Connection

M12A input - Cable	Continuous	Master Continuous - Strobe
Pin 1 - Brown	+24 Vdc	+24 Vdc
Pin 2 - White	Not connected	Trigger NPN
Pin 3 - Blue	0 Vdc	0 Vdc
Pin 4 - Black	Not connected	Trigger PNP

M12A Male

Fixings

P00R3, M6D16

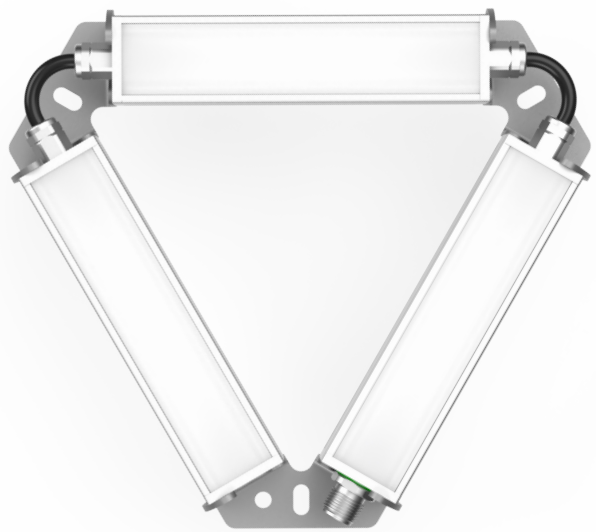

P3D · 850 nm

lumher

Measures

IP40 / IP65

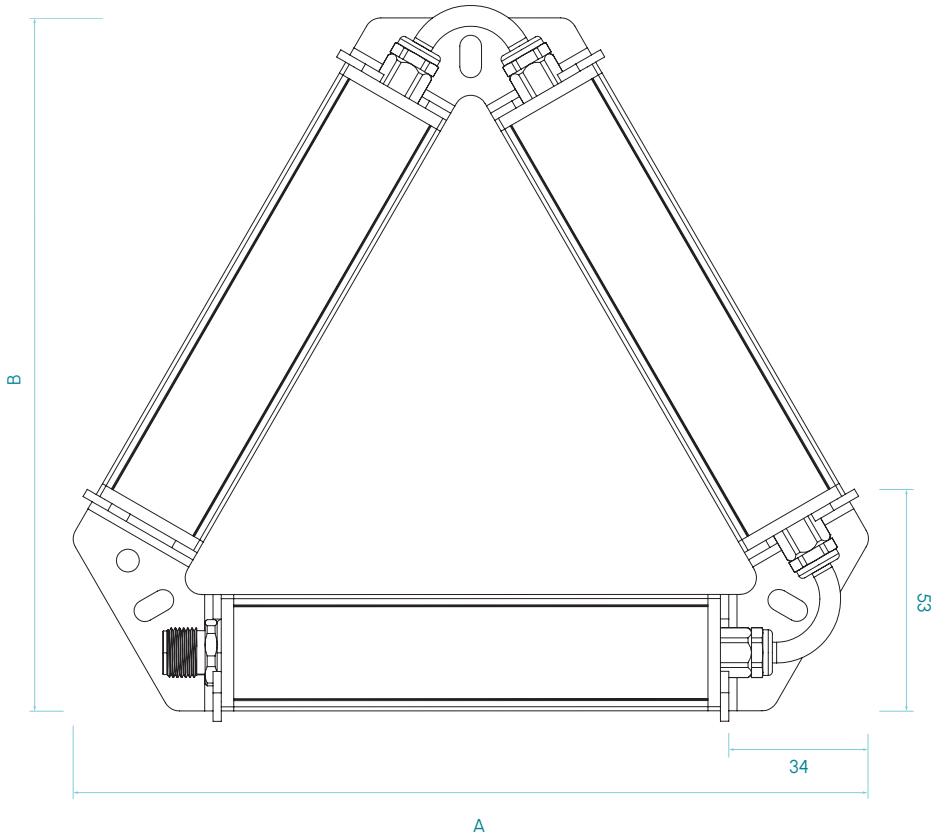

Selection guide

P3D F

- **Input**
  - K - Axial Cable, 2 m
  - Y - M12A axial male connector
  - PY - 10 cm axial cable with M12A male connector
- **Diffuser**
  - C - Semidiffuse
  - U - Ultradiffuse
- **IP Rating**
  - 3 - IP40
  - 5 - IP65
- **Working mode**
  - P - Continuous
  - Z - Master Cont. - Strobe
- **Length each section**
  - 1 ... 4 - 90 mm steps

Measures in mm

P3D · 850 nm

lumher

Model P3D · Infrared 850 nm

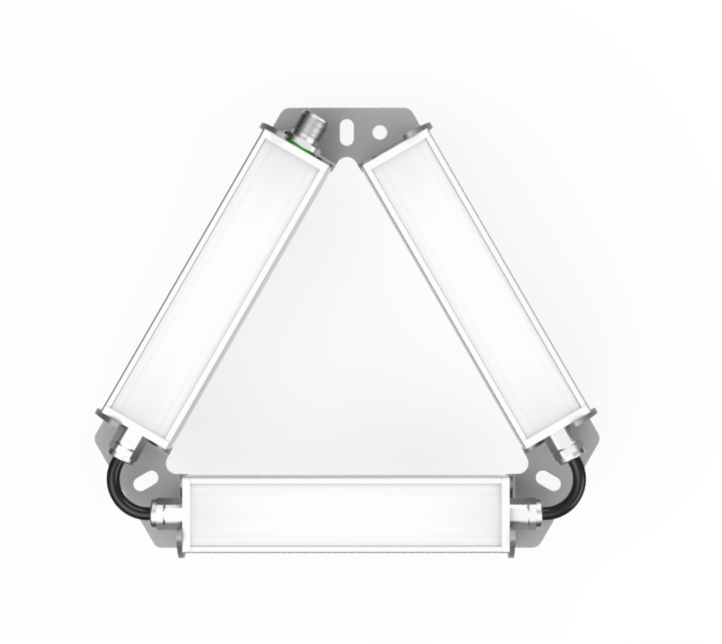

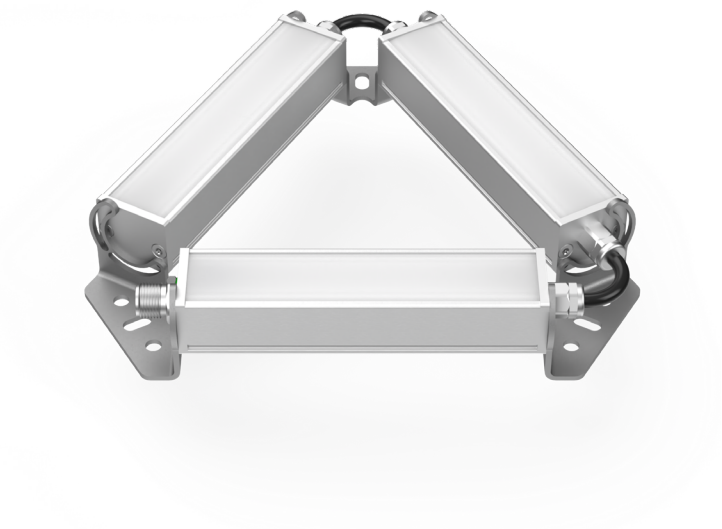

850nm
INFRARED

SEMIDIFFUSE
60°

ULTRADIFFUSE
110°

PHOTOBIOLOGICAL RISK
RG1 - LOW

60.000h
LIFESPAN

Table of characteristics

	Length A (mm)	Length B (mm)	Weight (g)	Radiated power [1] (W) CONT.	Radiated power [1] (W) STROBE	Power consumed (W) CONT.	Power consumed (W) STROBE
P3D 1...	189	166	382	1,2	4,8	3,0	12,0
P3D 2...	279	242	526	2,4	9,6	6,0	24,0
P3D 3...	369	320	670	3,6	14,4	9,0	36,0
P3D 4...	459	398	814	4,8	19,2	12,0	48,0

(1) The radiated power (W) is before diffuser.

lumher